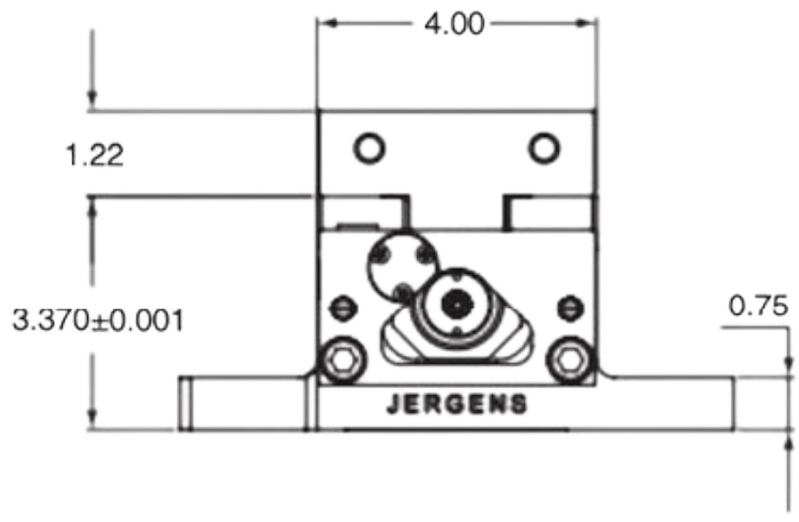
4.00
1.22
3.370±0.001
0.75
JERGENS

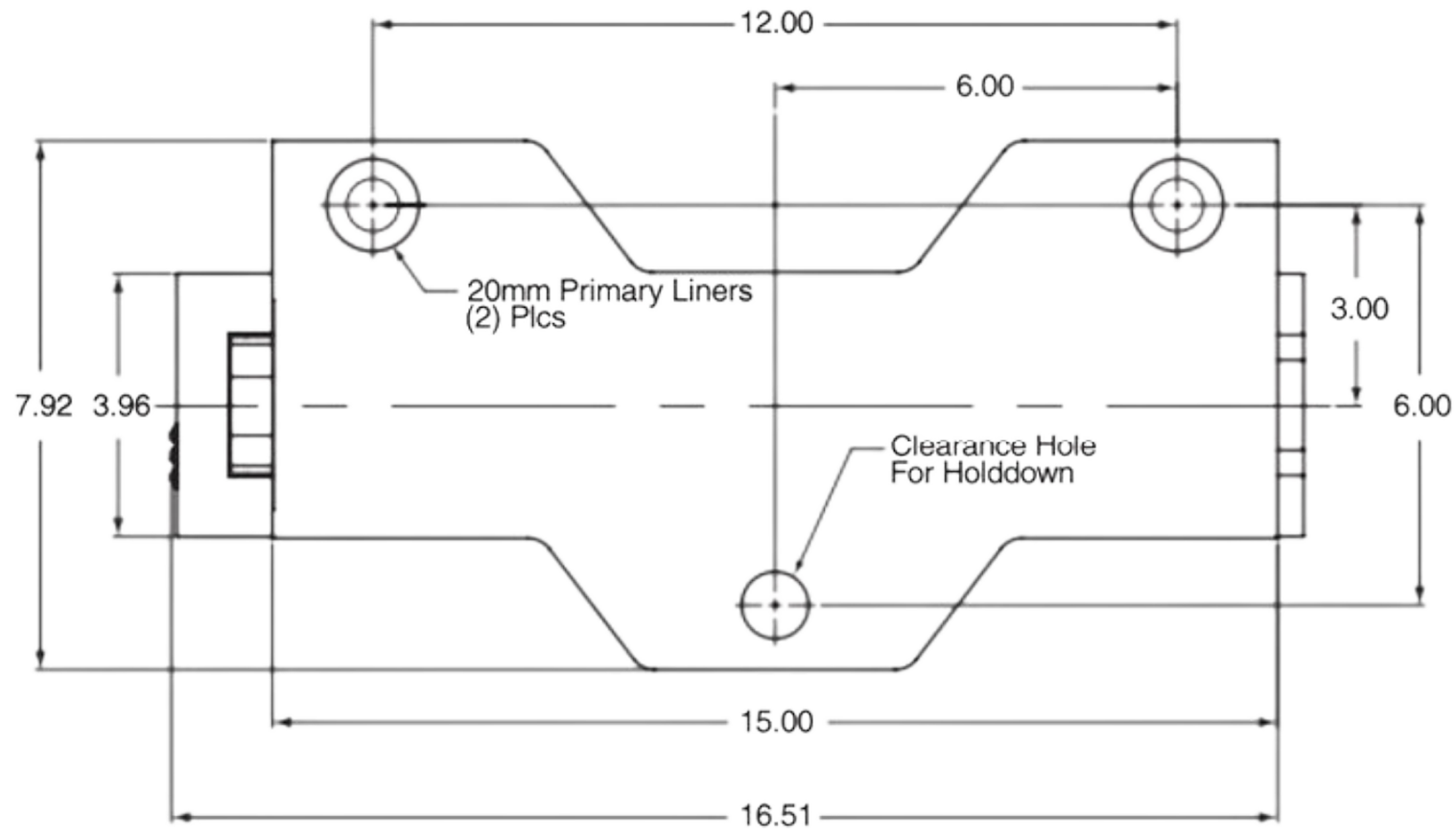
12.00
6.00
20mm Primary Liners
(2) Plcs
3.00
7.92
3.96
6.00
Clearance Hole
For Holddown
15.00
16.51